Cambridge Assessment International Education

Cambridge IGCSE™

CANDIDATE NAME	

CENTRE NUMBER						CANDIDATE NUMBER				

0705267141

DESIGN & TECHNOLOGY **0445/43**

Paper 4 Systems & Control **May/June 2022**

1 hour

You must answer on the question paper.

No additional materials are needed.

INSTRUCTIONS

- Section A: answer **all** questions.
- Section B: answer **one** question.
- Use a black or dark blue pen. You may use an HB pencil for any diagrams or graphs.
- Write your name, centre number and candidate number in the boxes at the top of the page.
- Answer in the space provided.
- Do **not** use an erasable pen or correction fluid.
- Do **not** write on any bar codes.
- You may use a calculator.

INFORMATION

- The total mark for this paper is 50.
- The number of marks for each question or part question is shown in brackets [ ].
- All dimensions are in millimetres.

This document has **16** pages.

DC (CE/CB) 303095/1
© UCLES 2022

Section A

Answer **all** questions in this section.

1 Name **three** types of man-made structure.

1 .....

2 .....

3 .....
[3]

2 Fig. 2.1 shows a wooden support structure for a section of railway track.

Fig. 2.1

(a) Describe the methods used to ensure that the structure can safely support a heavy load.

.....

.....

..... [2]

(b) Give **two** reasons for choosing wood as the material for the structure.

1 .....

2 .....
[2]

3 Window frames can be made from wood or plastic.

(a) Give **two** advantages of using plastic rather than wood for window frames.

1 .....

.....

2 .....

.....
[2]

(b) Give **two** disadvantages of using plastic rather than wood for window frames.

1 .....

.....

2 .....

.....
[2]

4 State **two** purposes of oil in a car engine.

1 .....

2 .....
[2]

5 Fig. 5.1 shows two examples of conversion of motion.

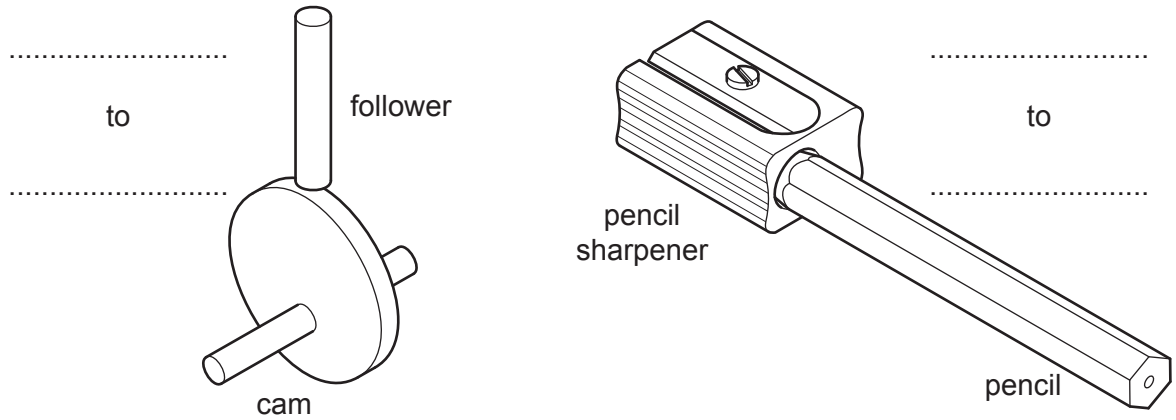

Fig. 5.1

For each example complete the labels in Fig. 5.1 to show the conversion of motion. [4]

6 Fig. 6.1 shows three electronic symbols.

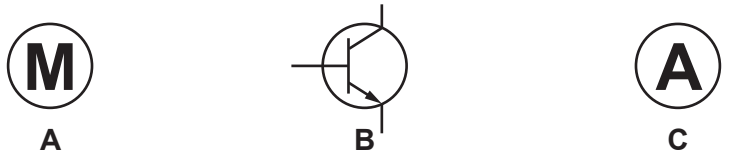

Fig. 6.1

State the component that is represented by each symbol.

Symbol **A** .....

Symbol **B** .....

Symbol **C** .....
[3]

7 Push button switches can be bought as either PTM or PTB types.
Explain what is meant by PTM and PTB.

.....

.....

.....

..... [2]

8 Name a material used as an electrical conductor.

..... [1]

9 Fig. 9.1 shows two 1.5 V batteries.

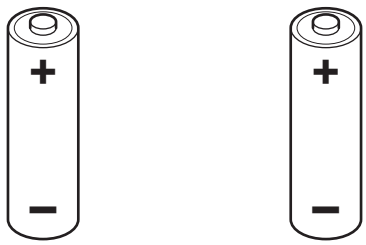

Fig. 9.1

Draw on Fig. 9.1 to show how the batteries can be connected so that the measured voltage remains at 1.5 V. [2]

Section B

Answer **one** question from this section.

10 Fig. 10.1 shows views of a wooden aircraft propeller made from a number of layers of hardwood glued together.

Fig. 10.1

(a) **(i)** Name the method of construction that has been used to produce the propeller.

..... [1]

(ii) Describe the properties that are required in the adhesive that is used to glue the hardwood layers together.

.....

.....

..... [2]

(iii) Give **two** benefits to the manufacturer of using this method of construction to produce the propeller.

1 .....

.....

2 .....

.....
[2]

(b) Fig. 10.2 shows three methods of extending the length of a piece of steel tube.

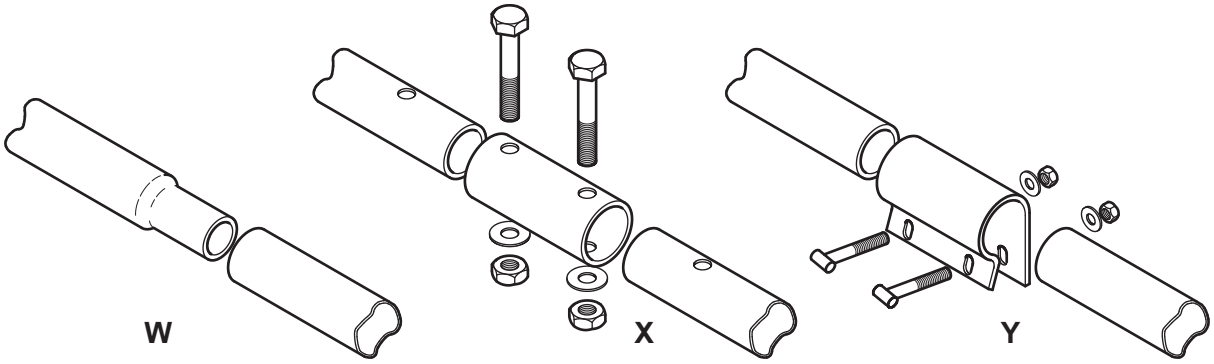

Fig. 10.2

(i) Complete Table 10.1 by adding ticks (✓), to show **two** forces that, when applied to the extended length of tube, will be **best** resisted by each method.

Table 10.1

Method	Bending	Torsion	Compression	Tension
W				
X				
Y				

[6]

(ii) For **one** of the methods used in **part (b)(i)**, use sketches and notes to show an improvement that will allow it to resist greater force.
Identify the greater forces being resisted.

[3]

(c) Fig. 10.3 shows two views of a wall bracket to hold a hanging basket for flowers.

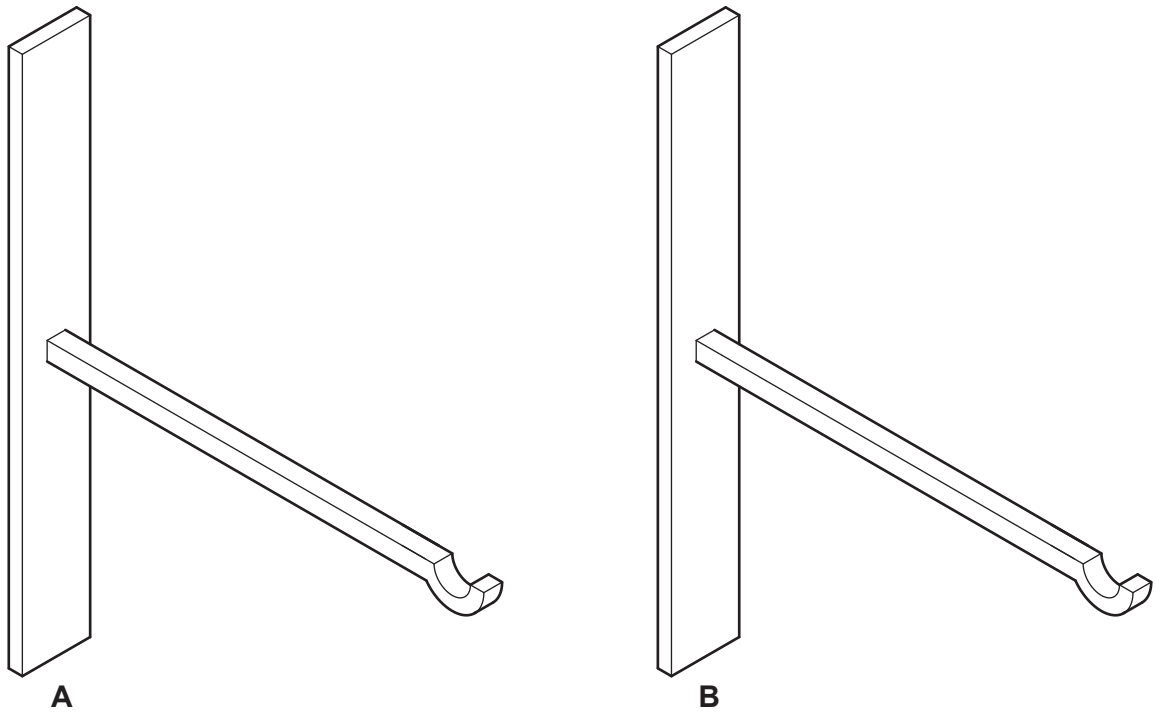

Fig. 10.3

(i) On view **A** draw a tie on the bracket to prevent the arm from bending. [2]

(ii) On view **B** draw a strut that will prevent the arm from bending. [2]

(iii) Add a gusset plate to view **B** to increase resistance to bending. [2]

(d) Fig. 10.4 shows a car park barrier that can be raised or lowered by an electric motor to allow cars through.

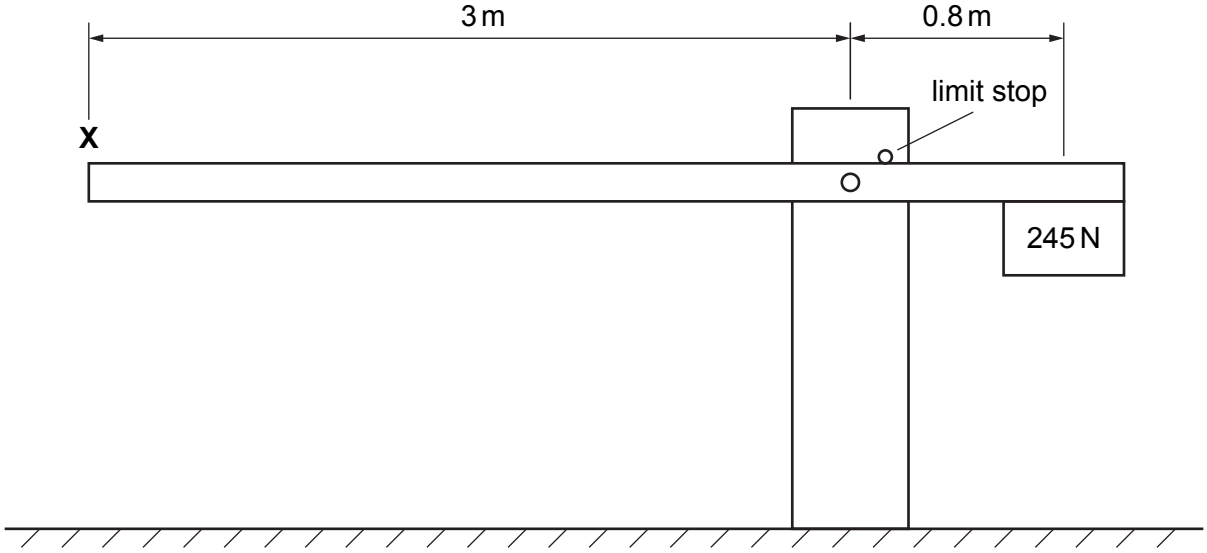

Fig. 10.4

(i) Explain why a limit stop is used on the barrier.

.....

.....

.....

..... [2]

(ii) Calculate the force required at point **X** needed to keep the barrier in equilibrium.

.....

.....

.....

..... [3]

11 Fig. 11.1 shows a hand-operated whisk.

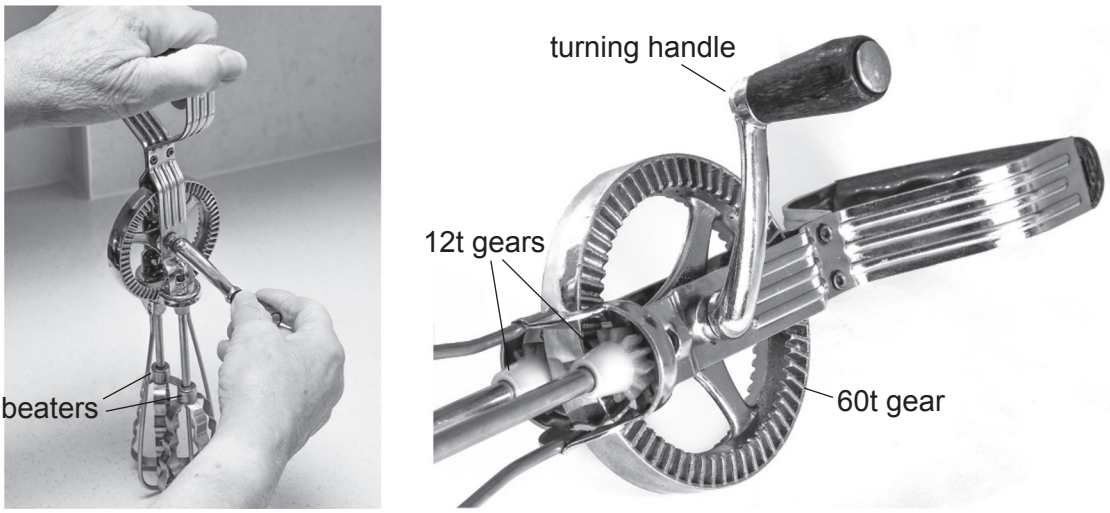

Fig. 11.1

(a) Materials used in the whisk include stainless steel and nylon.

(i) Give **one** property of each material that makes it suitable for the whisk.

stainless steel .....

.....

nylon .....

.....
[2]

(ii) The whisk turning handle operates a 60t bevel gear connected to drive two 12t bevel gears, each attached to a beater.
Name the mechanism used in the turning handle.

..... [1]

(iii) State the velocity ratio of the gears.

..... [2]

(iv) The whisk turning handle can be operated comfortably at 30 rpm.
Calculate the speed of each beater when the turning handle is operated at 30 rpm.

.....

.....

..... [2]

(v) Describe the movement of one beater relative to the other.

.....

..... [2]

(b) **(i)** Name **three** types of bearing commonly used in mechanisms.

1 .....

2 .....

3 .....
[3]

(ii) Describe the purpose of a bearing in a mechanism.

.....

.....

..... [2]

(iii) Use sketches and notes to show how a bearing can control end-to-end movement (thrust) on a shaft.

[3]

(c) **(i)** Describe the difference between a first, second and third order lever.

.....

.....

.....

..... [3]

(ii) Explain why levers are important in hand operated machinery.

.....

.....

..... [2]

(d) Fig. 11.2 shows a hoist that uses a compound pulley system to lift heavy loads.

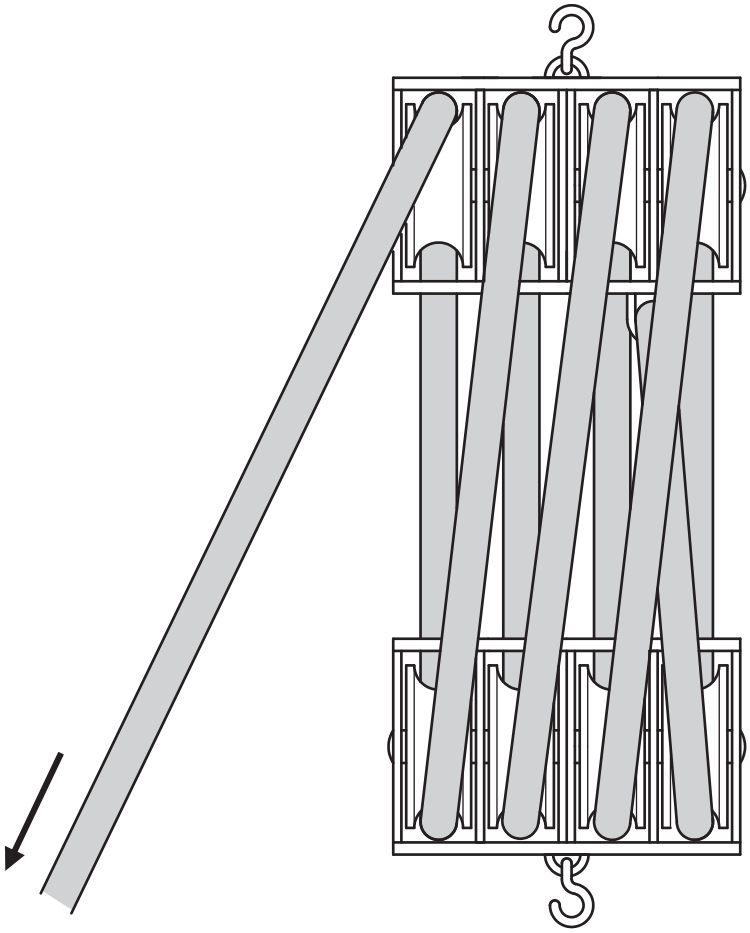

Fig. 11.2

(i) State the mechanical advantage of the pulley system.

..... [1]

(ii) Calculate the force, in Newtons, needed to raise a mass of 200 kg using the pulley system.

1 kg = 9.81 N

.....

.....

..... [2]

12 **(a)** Fig. 12.1 shows an NPN transistor used as a switch.

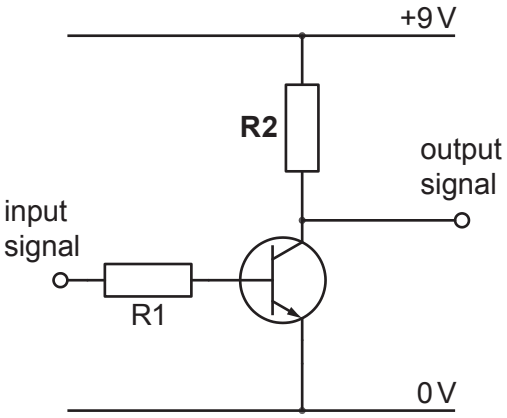

Fig. 12.1

(i) State the purpose of **R2** in the circuit.

..... [1]

(ii) Give **two** advantages of a transistor switch compared to a mechanical switch.

1 .....

.....

2 .....

.....
[2]

(iii) Give **one** disadvantage of a transistor switch compared to a mechanical switch.

.....

..... [1]

(b) Fig. 12.2 shows a circuit that uses an NPN transistor to amplify current.

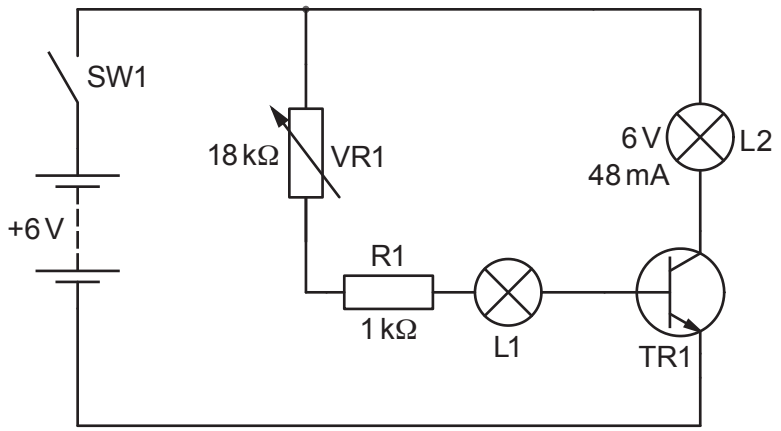

Fig. 12.2

(i) Explain why lamp L2 lights but lamp L1 does not light when SW1 is closed.

.....

.....

.....

.....

..... [3]

(ii) The amplification (gain) provided by the transistor can be calculated by dividing the collector current by the base current.
Calculate the gain provided by TR1 in the circuit in Fig. 12.2.

Use the formulas: $\frac{V}{R}$ $\frac{IC}{IB}$

.....

.....

.....

..... [2]

(iii) State the reason for including R1 in the circuit.

.....

..... [1]

(c) LEDs have to be fitted in a circuit the correct way around.

(i) Use sketches and notes to show how the legs of a standard LED can be identified so that it can be fitted correctly.

[2]

(ii) Describe how to identify the legs or connections on an integrated circuit (IC).

.....

.....

..... [2]

(iii) Name **three** other electronic components that must be fitted in a circuit the correct way around.

1 .....

2 .....

3 .....

[3]

(d) Fig. 12.3 shows a light dependent resistor (LDR).

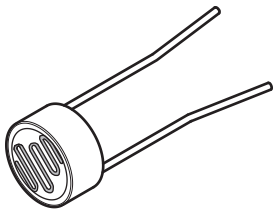

Fig. 12.3

Use sketches and notes to show how a light dependent resistor can be used in a potential divider circuit to provide a rising voltage as the light level increases.
You must include a method of adjusting the level of sensitivity.

[3]

(e) Fig. 12.4 shows an incomplete intruder alarm circuit. The circuit uses three reed switches as inputs to a logic system and a latched relay as the output to the system.
Any one of the reed switches can trigger the alarm.

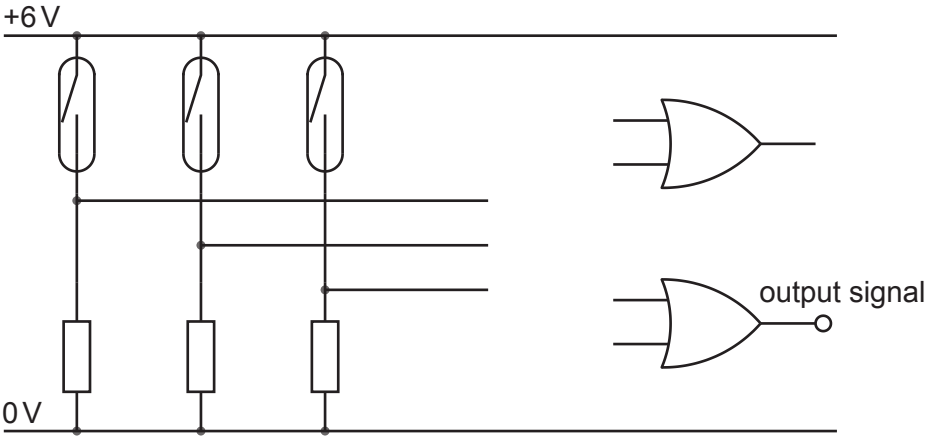

Fig. 12.4

(i) Add connections from the reed switches to the logic gate inputs in Fig. 12.4 that will cause the output signal to go high when any one of the reed switches is operated. [2]

(ii) Fig. 12.5 shows the latched relay circuit.

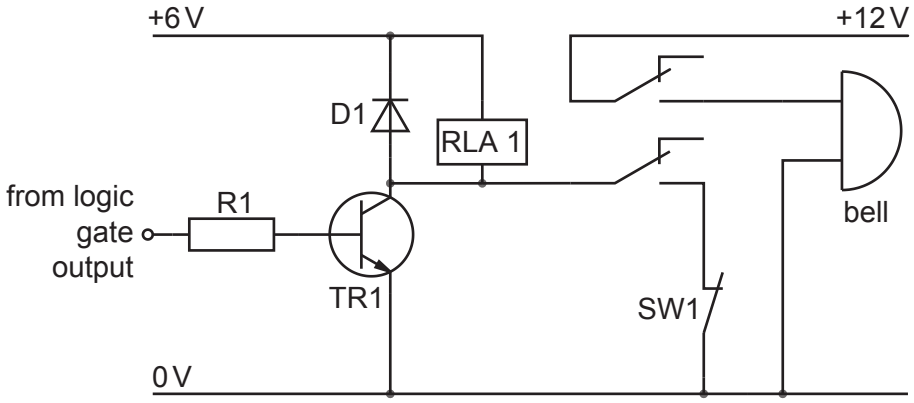

Fig. 12.5

Explain how the latched relay operates.

.....

.....

.....

.....

..... [3]

Permission to reproduce items where third-party owned material protected by copyright is included has been sought and cleared where possible. Every reasonable effort has been made by the publisher (UCLES) to trace copyright holders, but if any items requiring clearance have unwittingly been included, the publisher will be pleased to make amends at the earliest possible opportunity.

To avoid the issue of disclosure of answer-related information to candidates, all copyright acknowledgements are reproduced online in the Cambridge Assessment International Education Copyright Acknowledgements Booklet. This is produced for each series of examinations and is freely available to download at www.cambridgeinternational.org after the live examination series.

Cambridge Assessment International Education is part of Cambridge Assessment. Cambridge Assessment is the brand name of the University of Cambridge Local Examinations Syndicate (UCLES), which is a department of the University of Cambridge.

© UCLES 2022